User's Guide
SLOU280A–January 2009–Revised September 2014

# TAS5711EVM Evaluation Module

This manual describes the operation of the TAS5711EVM to evaluate the performance of the TAS5711 integrated digital audio power amplifier. The main contents of this document are:

- Details on how to properly connect a TAS5711 Evaluation Module (EVM) and the details of the EVM
- Details on how to install and use the GUI to program the TAS5711EVM
- Quick-Start Guide for the common modes in which the TAS5711EVM can be used
- Details on how to use the audio processing features like EQ and DRC

**Contents**


1 Overview ..... 3
1.1 TAS5711EVM and MC57xxPSIA Features ..... 4
2 Installation ..... 4
2.1 EVM Installation ..... 4
2.2 Software Installation ..... 7
3 Software Quick-Start Guide ..... 10
4 Using the EVM Software ..... 10
4.1 Initial Steps ..... 10
4.2 Connect the GUI to the EVM ..... 10
4.3 I2C Memory Tool ..... 10
4.4 Volume Function ..... 11
4.5 Biquad GUI ..... 12
4.6 DRC GUI ..... 13
5 Advanced Audio Processing Features in TAS5711 ..... 15
6 Jumpers and Control Utilities on MC57xxPSIA board ..... 16
6.1 RCA/OPTICAL Jumpers ..... 16
6.2 Switches ..... 16
6.3 LED Indicators ..... 16
7 Board Layouts, Bill of Materials, and Schematic ..... 16
7.1 TAS5711EVM Board Layouts ..... 16
7.2 Bill of Materials ..... 18
7.3 Schematic ..... 19


**List of Figures**


1 TAS5711EVM Printed-Circuit Board ..... 3
2 Complete System and EVM Signal Path Overview ..... 4
3 General Connection Picture ..... 4
4 Connecting TAS5711EVM to MC57xxPSIA ..... 5
5 BTL Connection ..... 6
6 SE Connection ..... 6
7 Process Flow for TAS5711 UG ..... 8
8 GUI Main Window ..... 9
9 Memory Tool Window ..... 11
10 Volume Control ..... 11



Equibit is a trademark of Texas Instruments.
I$^2$C is a trademark of Philips Corporation.




Copyright © 2009–2014, Texas Instruments Incorporated

11 Selecting Biquad GUI ..... 12
12 Filter Creation Tool Window ..... 12
13 DRC Parameters ..... 13
14 Activating the DRC GUI ..... 13
15 Time Constants Button ..... 14
16 TAS5711EVM Top Composite Assembly ..... 16
17 TAS5711EVM Top Copper Assembly ..... 17
18 MC57xxPSIA Top Assembly ..... 17

**List of Tables**

1 Recommended Power Supplies ..... 6
2 Bill of Materials for TAS5711EVM ..... 18


Copyright © 2009–2014, Texas Instruments Incorporated

# 1 Overview

The TAS5711 evaluation module demonstrates the TAS5711 device from Texas Instruments. The TAS5711 combines a high-performance PWM processor with a class-D audio power amplifier. This EVM can be configured with two single-ended speakers with a BTL subwoofers (2.1) or two bridge-tied speakers (BTL) (2.0). For detailed information about the TAS5711 device, review the device data sheet (SLOS600). The pulse width modulator (PWM) is based on TI's Equibit™ technology. The TAS5711 has additional audio processing features such as surround sound (3D).

The EVM software with its graphic user interface (GUI) facilitates evaluation by providing access to the TAS5711 registers through a USB port. See the *Using the EVM Software* section for further details.

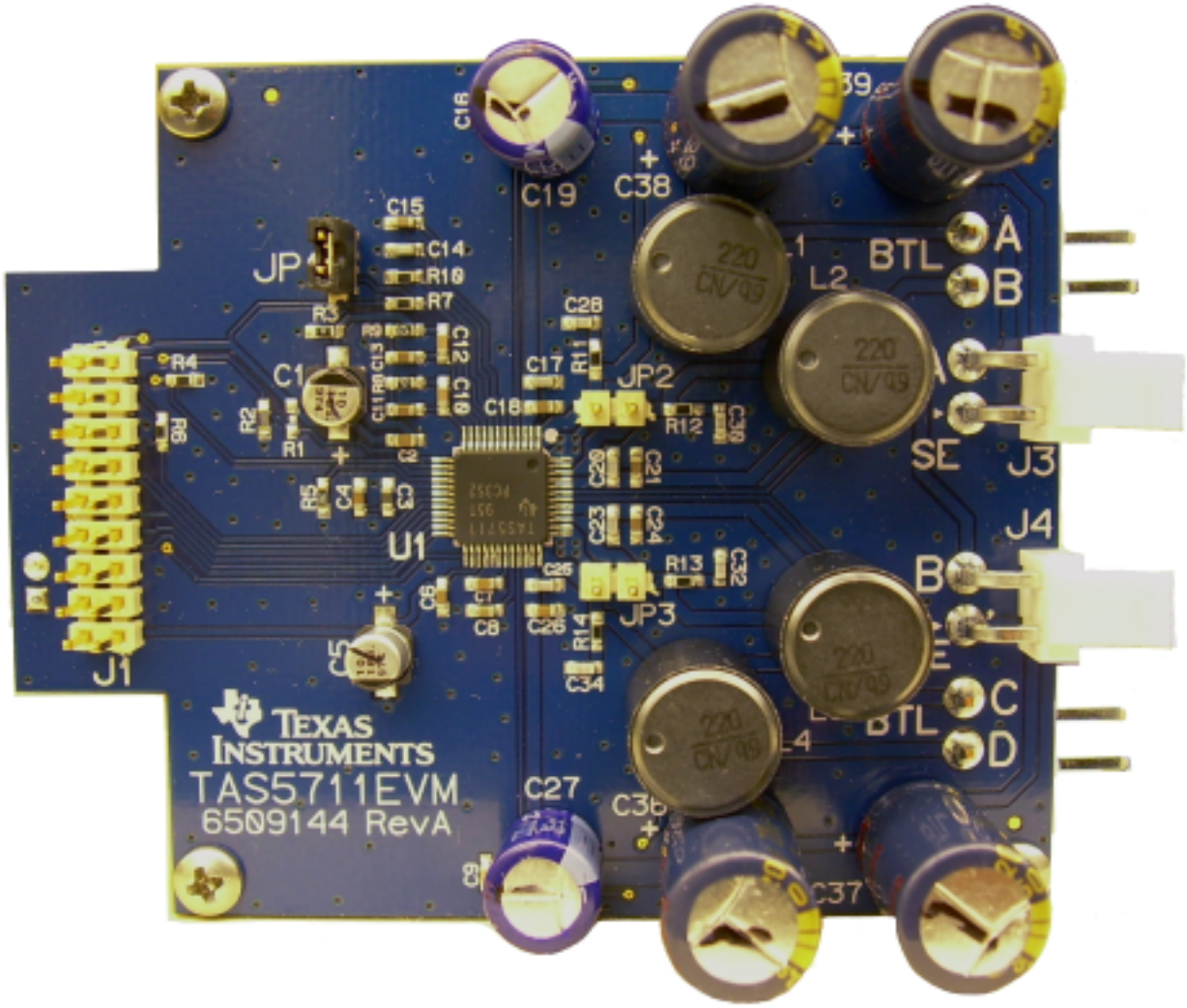


**Figure 1. TAS5711EVM Printed-Circuit Board**

The EVM, together with other TI components on this board, is a complete 2.1-channel digital audio amplifier system. The MC57XXPSIA Controller board includes a USB interface, a digital input (SPDIF), analog inputs via the ADC, power inputs, and other features like a mute function and power down.


Copyright © 2009–2014, Texas Instruments Incorporated

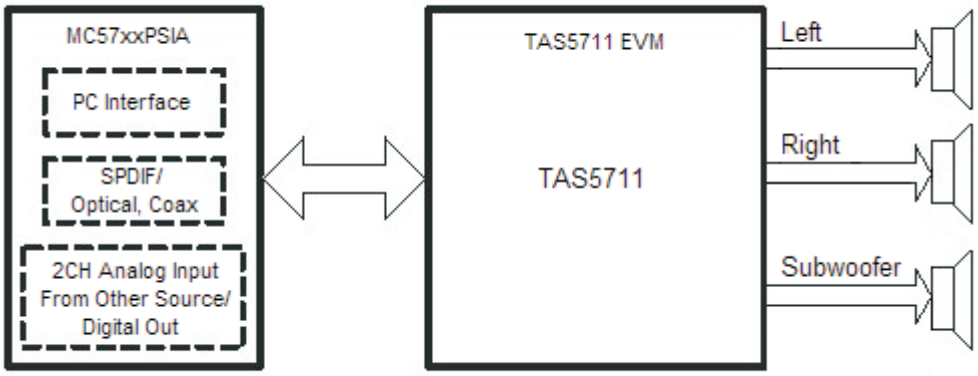


**Figure 2. Complete System and EVM Signal Path Overview**

### *1.1 TAS5711EVM and MC57xxPSIA Features*

- Channel evaluation module design
- Self-contained protection systems and control pins
- USB interface
- Standard $I^2S$ data input using optical or coaxial inputs
- Analog input through analog-to-digital converter
- Double-sided, plated-through PCB, 1-oz copper, 2 mm
- Access to control signal gain and data format through EVM-software GUI

## 2 Installation

This section describes the EVM and software installation.

### *2.1 EVM Installation*

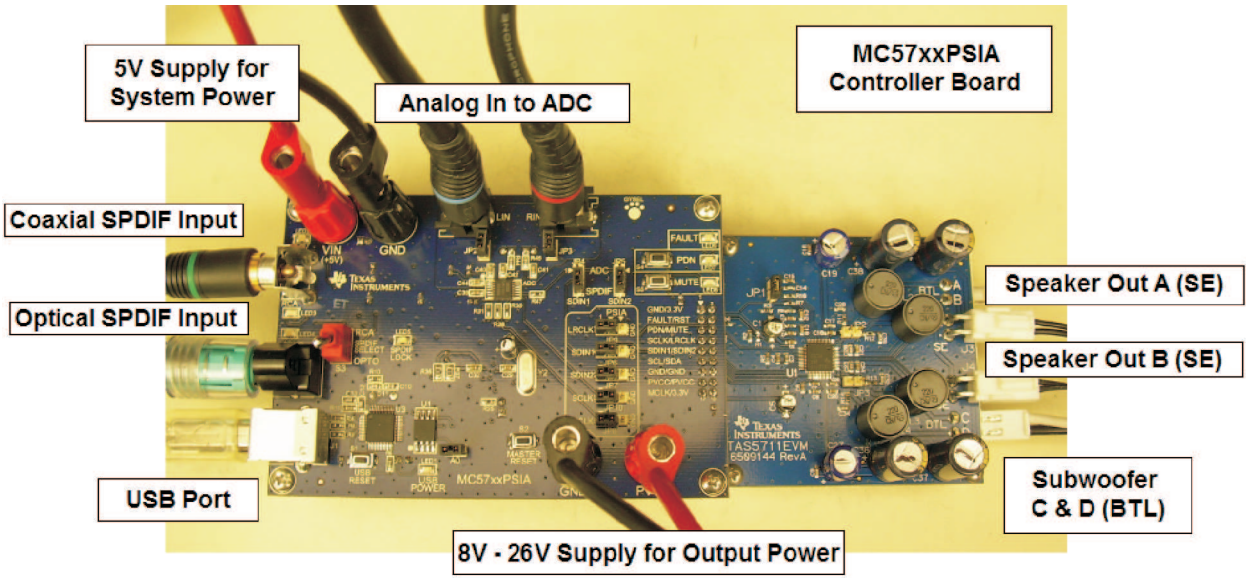


**Figure 3. General Connection Picture**


Copyright © 2009–2014, Texas Instruments Incorporated

The following are the basic tools for the initial EVM power up.

- 5-V, 1-A power supply (VIN)
- 8–26-V, 4-A power supply (PVDD)
- Banana-style test leads for power supplies and speakers
- Optical or coaxial cable for SPDIF interface based on signal source
- USB cable
- EVM software
- Two 4-Ω, one 8-Ω speakers or loads (for 2.1); two 8-Ω speakers or loads (for BTL)

The following sections describe the TAS5711EVM board in regards to power supply (PSU) and system interfaces.

### 2.1.1 Connecting the TAS5711EVM to MC57xxPSIA

On the right side of the MC57xxPSIA is a terminal block and another is located on the left of the TAS5711EVM (labeled J1). Carefully place the MC57xxPSIA block above the TAS5711EVM block and gently push down.

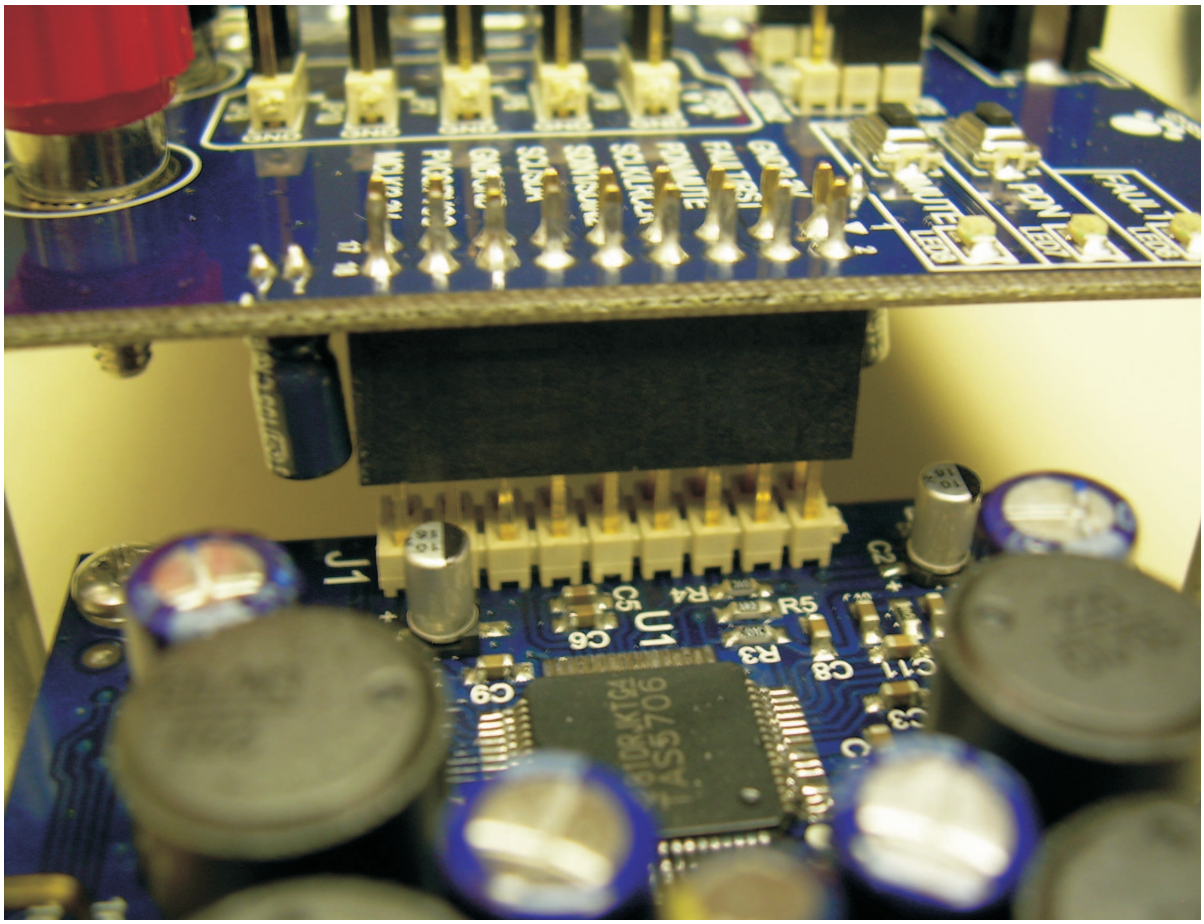


**Figure 4. Connecting TAS5711EVM to MC57xxPSIA**

### 2.1.2 PSU Interface

The TAS5711EVM is powered by two power supplies connected to the MC57xx controller board: a 5-V power supply (VIN), and a 8-V to 26-V (PVDD) power supply. The 3.3-V level is generated on the board by a voltage regulator from the 5-V supply.


Copyright © 2009–2014, Texas Instruments Incorporated

**NOTE:** The power-supply cable length must be minimized. Increasing the length of the PSU cable increases the distortion of the amplifier at high output levels and low frequencies

The maximum output-stage supply voltage depends on the speaker load resistance. Check the recommended maximum supply voltage in the TAS5711 data sheet.

**Table 1. Recommended Power Supplies**

| Description | Voltage Limitations | Current Recommendations |
|---|---|---|
| System power supply | 5 V | 1 A |
| Output power stage supply | 8–26 V | 4 A[(1)] |

(1) The rated current corresponds to three channels, full scale.

### 2.1.3 Loudspeaker Connectors

**CAUTION**

All BTL speaker outputs are biased at Vcc/2 and must not be connected to ground (e.g., through an oscilloscope ground).

Loudspeaker connections vary by device setup. When connecting a speaker in single-ended mode, connect the positive terminal to one output on the TAS5711EVM (A, B, C, or D), and connect the negative terminal to ground. When connecting a speaker in BTL mode, connect the speaker's two terminals across two outputs on the TAS5711EVM (A and B or C and D).

**Speakers or loads can be connected to the outputs A-D with clip leads, or cables can be made with female connectors (JST VHR-2N) that can mate to male connectors on the EVM board.**

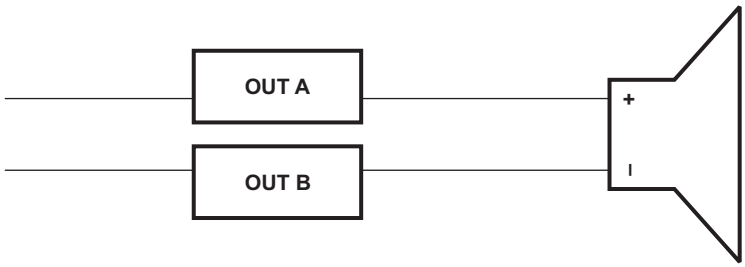


**Figure 5. BTL Connection**

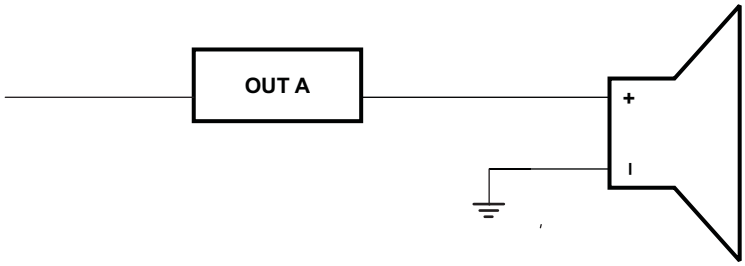


**Figure 6. SE Connection**


Copyright © 2009–2014, Texas Instruments Incorporated

### 2.1.4 USB Interface

The TAS5711 registers are accessed through I$^2$C™ bus lines SDA and SCL. The USB circuit and USB connector on the MC57xxPSIA board facilitates the connection between a host computer and the device. The EVM USB circuit is powered by the 5-V USB line of the host PC and is independent of the power supplies available on the board. The USB device that is used is a TAS1020B from Texas Instruments.

### 2.1.5 Digital Audio Interface SPDIF

The Digital Audio Interface SPDIF (RCA/OPTO) accepts digital audio data using the I$^2$S protocol. See the TAS5711 data sheet for more information.

The RCA connector and the OPTO connector are the two SPDIF interfaces on the MC57xxPSIA board. The switch S3 toggles between the OPTO and RCA connector to accommodate the signal source. When the RCA cable or optical cable is connected and the signal source is powered up, verify that the SPDIF lock indicator (blue LED5) illuminates, confirming that a viable signal is available to the device. Install a jumper on JP4 across the middle pin and the pin marked SPDIF to connect the digital source to SDIN1. Install a jumper on JP5 to connect the digital source to SDIN2.

For detailed information on how the data and clocks are provided to the TAS5711, see the schematic appearing at the end of this document and the DIR9001 device data sheet (SLES198).

### 2.1.6 ADC Interface

In the absence of a digital signal source, the PCM1808 ADC can be used to convert an analog audio signal to a digital signal to the TAS5711. The DIR9001 still provides clock signals to the ADC in this process. A 12-MHz crystal is installed on the MC57xxPSIA board. The ADC is an additional feature of this board to provide flexibility in sourcing an audio signal to the TAS5711. Review the PCM1808 data sheet (SLES177) for a detailed description of the ADC on this EVM. Install the jumper on JP4 and J5 across the middle pin and the pin marked ADC to select ADC as the source for SDIN1 and SDIN2.

### 2.1.7 Board Power-Up General Guidelines

Connect the MC-57xx and the TAS5711EVM boards by locating pin 1 on each board, indicated by a small white triangle. The MC-57xx plugs down onto the TAS5711EVM board (i.e., the TAS5711EVM board fits underneath the MC57xxPSIA board). Pin 1 on each board must be connected to each other.

Install the EVM software on the PC before powering up the board. After connecting the loudspeakers or other loads, power supplies, and the data line, power up the 5-V power supply first; then power up the PVDD power supply. It is recommended initially to set the PVDD level to 10 V, then ramp it up to 20 V to verify cable connections.

## *2.2 Software Installation*

Download the TAS570x GDE from the TI Web site, located on the TAS5711EVM product page. The TI Web site always has the latest release and any updates to versions of the GUI.

Execute the GUI install program, Setup.exe. Once the program is installed, the program group and shortcut icon is created in Start → Program → Texas Instruments Inc → TAS570X GDE. THE GUI comes up as shown in Figure 7.


Copyright © 2009–2014, Texas Instruments Incorporated

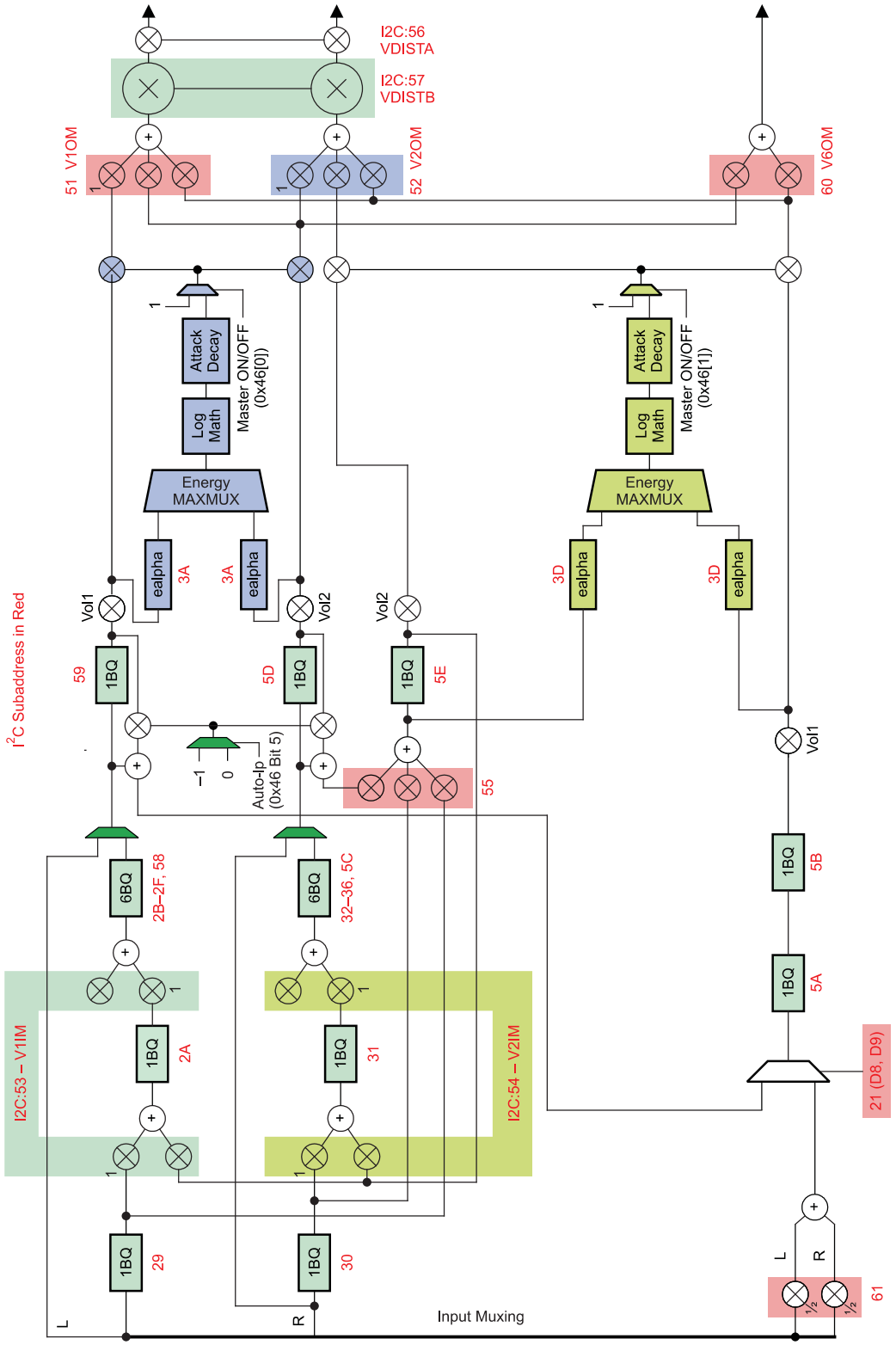


**Figure 7. Process Flow for TAS5711 UG**



Copyright © 2009–2014, Texas Instruments Incorporated

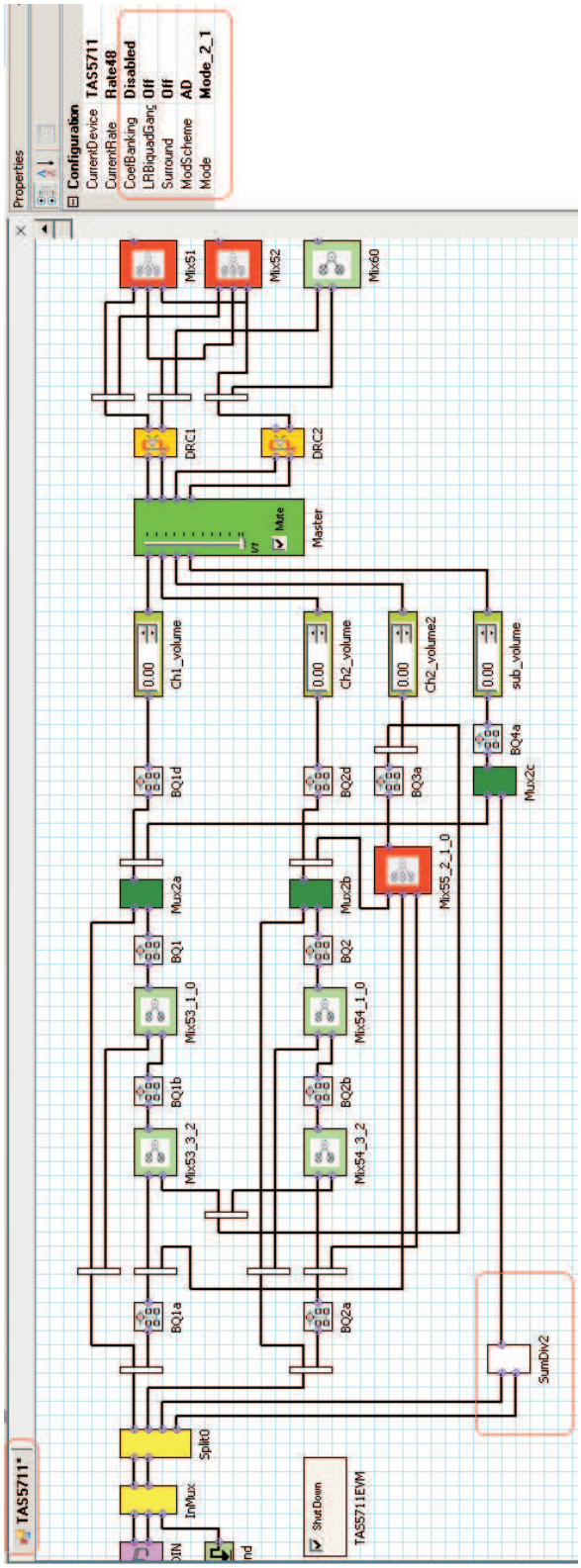


**Figure 8. GUI Main Window**


Copyright © 2009–2014, Texas Instruments Incorporated

## 3 Software Quick-Start Guide

To initialize the TAS5711EVM in its default state of 2.1, AD mode operation, perform the following steps.

1. Open the TAS570X GDE by clicking Start → All Programs → Texas Instruments Inc → TAS570x GDE → TAS570X GDE.
2. Select the TAS5711 tab.
3. If the mode is 2.0 or PBTL, select accordingly on the mode menu in the properties window.
4. If the modulation scheme is not AD, select that also. In 2.1 mode, the SE channels are always AD.
5. Jumper JP1 must be left IN when used in SE or BTL mode. Jumper JP1 must be LEFT OPEN for PBTL mode.

See Section 4 for information on how to manipulate the more advanced features of the TAS570x GDE, such as the I2C Memory Tool, the Biquad GUI, and the DRC GUI.

## 4 Using the EVM Software

### *4.1 Initial Steps*

Select the appropriate tab; in this case, select the TAS5711_10 tab. It has two subwindows. One shows the Process Flow window. From the Process Flow window, each of the signal processing function tools can be selected by clicking on it. The Biquad GUI (labeled as BQ1, BQ2, etc.) and the DRC GUI (labeled as DRC1, DRC2, etc.) can be opened by using the right mouse button. This window also shows Input select, Mode select, Channel, and Master Volume. All functions are arranged visually in the order that they are in the device.

The other subwindow, Properties, has the properties that a user can view or update by selecting from the available options. The properties available change with the device selected. From the main window, the user must set three properties before connecting to the EVM.

Set the Current Device field to TAS5711, adjust the sampling rate (in the Current Rate Field) and enable or disable the autobank switch function (in the Coef Banking Field). The TAS5711 automatically detects sample rates; however, setting the sample rate in the GUI allows optimal synchronization with the device.

### *4.2 Connect the GUI to the EVM*

Once the properties window selections have been made, go to the menu Target → Connect.

This sends the initialization commands to the device. Master volume is in mute by default. Select the master volume function. Type the required volume in the properties window. At this time, audio, if connected properly, plays through the device. If no audio is heard, ensure that the All channel shutdown is unchecked. When the Connect command is issued, if an error appears indicating a USB problem, check the connections, and press the USB RESET button on the controller board. Then disconnect and re-connect the EVM from the Target menu.

### *4.3 I2C Memory Tool*

This tool can be opened from GDE (Tools → I2C Memory Tool) or independent of GDE from Start → Program → Texas Instruments Inc → Memory Tool.

Select I2C as show in Figure 9.


Copyright © 2009–2014, Texas Instruments Incorporated

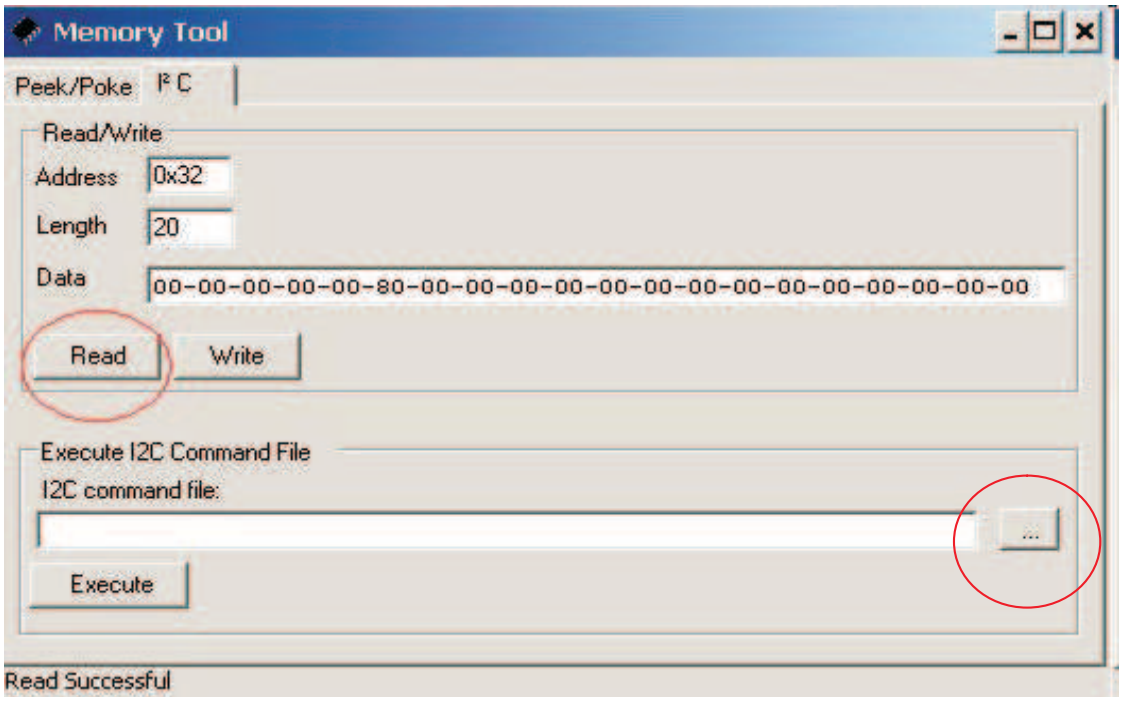


**Figure 9. Memory Tool Window**

I2C registers can be written or read using this tool. The I2C command file can be sent by selecting the command file and *Execute* command.

## 4.4 Volume Function

The Individual channel volume and Master volume can be selected, and the required volume value can be typed into the property Window after selecting the function with the mouse (see Figure 10).

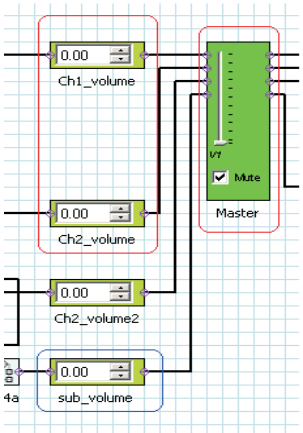


**Figure 10. Volume Control**


Copyright © 2009–2014, Texas Instruments Incorporated

## 4.5 Biquad GUI

Using the right button of mouse, select Biquad GUI (Figure 11).

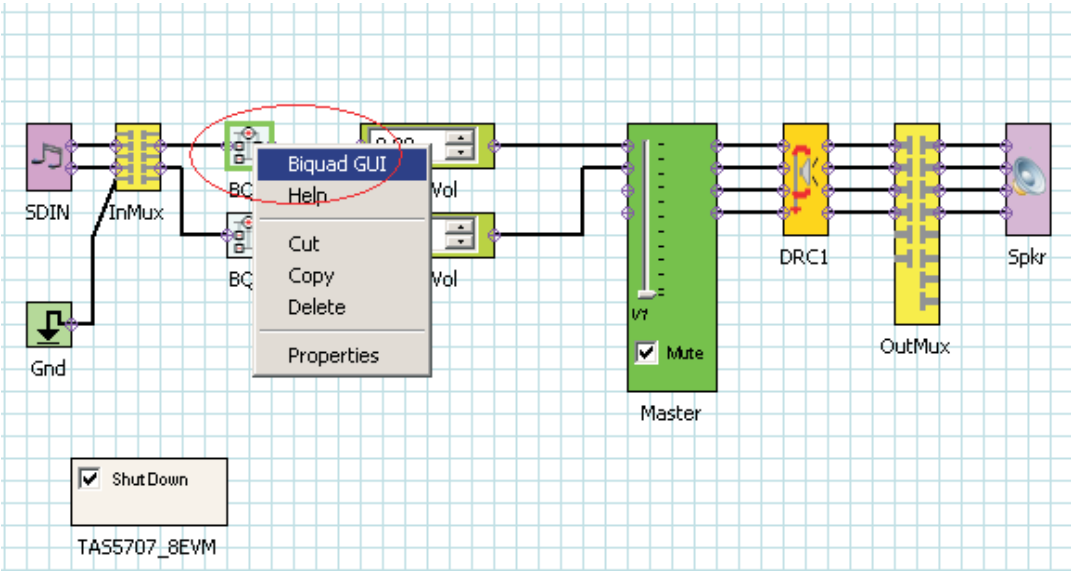


**Figure 11. Selecting Biquad GUI**

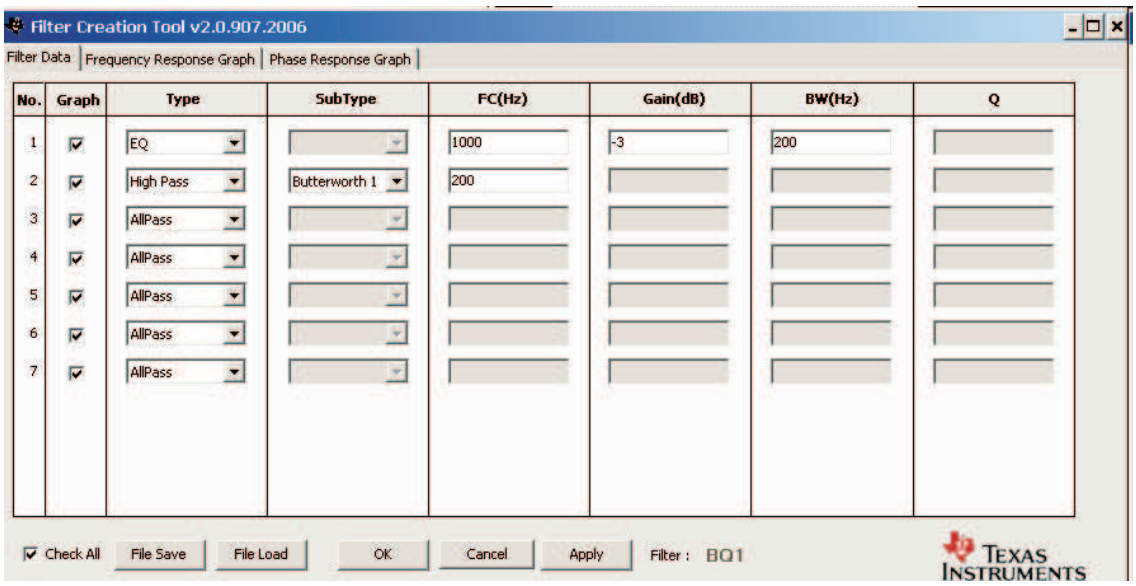


**Figure 12. Filter Creation Tool Window**

A check mark selects the Biquad. If not selected, the Biquad is in ALL PASS Mode.

The frequency response for the current settings can be viewed and adjusted in **Frequency Response Window** Tab (Figure 12). The Individual Biquad Gains must be within ±12 db.

Clicking **Apply** from the filter data window sends all the three banks of coefficients (providing auto bank is enabled).


Copyright © 2009–2014, Texas Instruments Incorporated

## 4.6 DRC GUI

The DRC GUI has two DRC blocks. One is for L, R channels, and the other one is for a subchannel. To set DRC, open the window and change the thresholds to match the required power output. The other parameters can be changed if necessary as explained in the following section.

Clicking on the function selects DRC GUI (Figure 13). Click on the DRC function, and check to see if DRC is enabled in the property window.

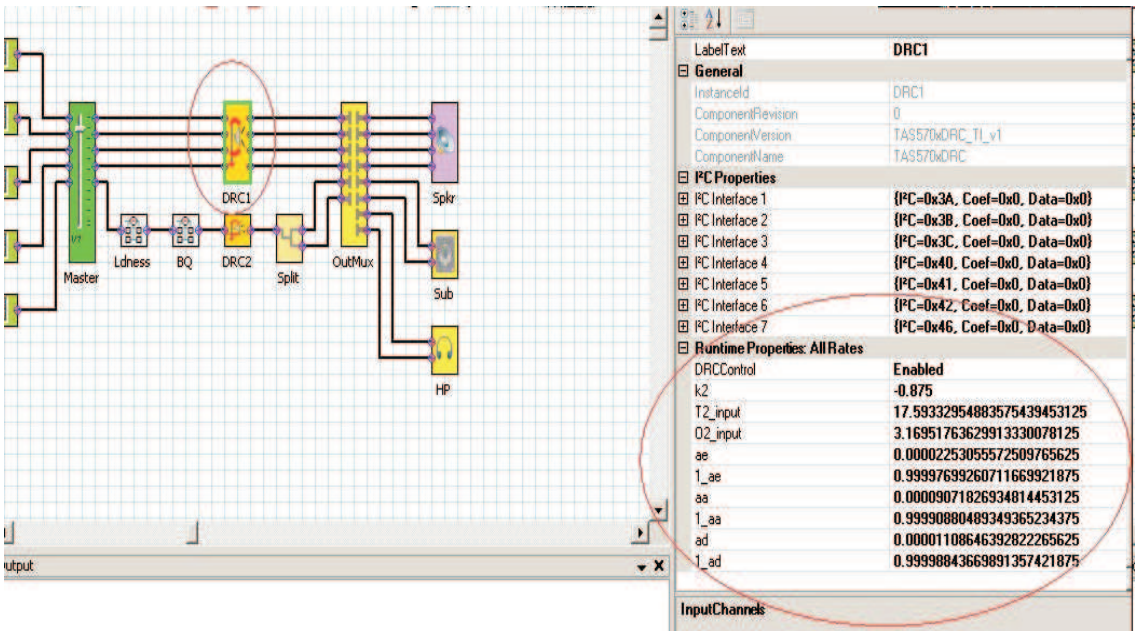


**Figure 13. DRC Parameters**

Next, using the right mouse button, select **Activate DRC GUI** (Figure 14).

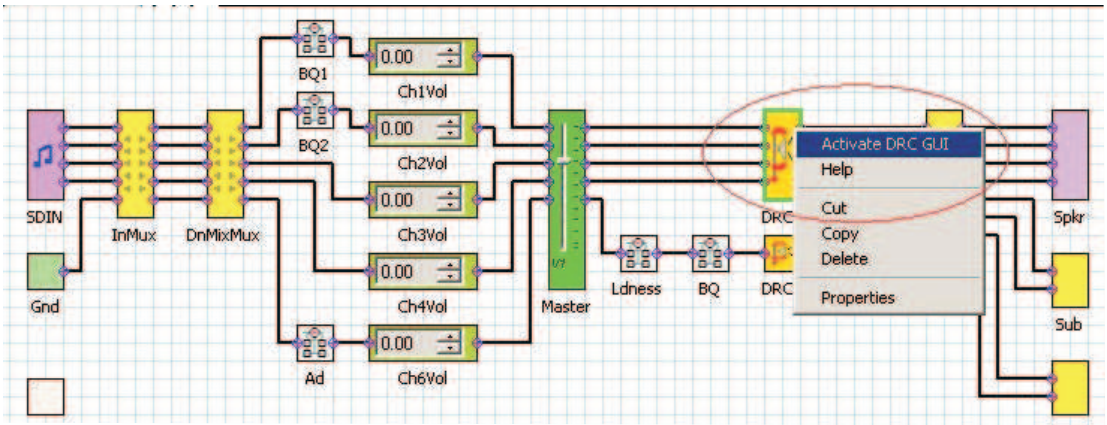


**Figure 14. Activating the DRC GUI**

Set the **compression ratio** to a value between 1 and 50.

The **offset** has a range at ±6 dB. If no offset is required, set the offset to 0. Offset is generally not required in a DRC application because is just provides a gain.

**Threshold** is selected with a value of 0 to –72 dB.


Copyright © 2009–2014, Texas Instruments Incorporated

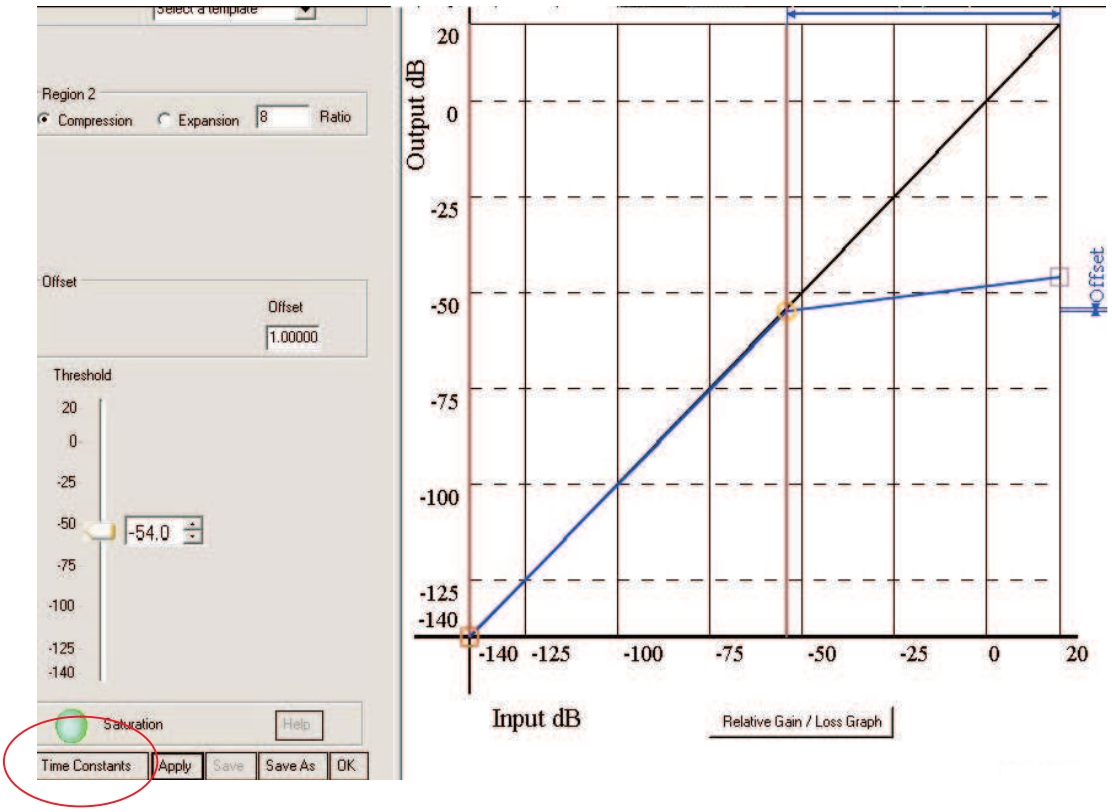


**Figure 15. Time Constants Button**

**Time constants:** Select the time constants to adjust the energy, attack, and decay filters (Figure 15).

### 4.6.1 MODULATION SCHEMES

**Common Configurations:**

1. 2.1 SE AD + BTL AD
2. 2.1 SE AD + BTL BD

Note:

AD : AD Modulation-Outputs are 180° out of phase
BD : BD Modulation
BTL : Bridge-Tied Load

#### *4.6.1.1 2 .1 AD (Default)*

1. Set up the hardware, and select the TAS5711 tab.
2. GDE: **Target > Connect**.
3. Check the 2.1 box in GUI.
4. Finally, uncheck the **shutdown** box to bring the device out of Shutdown mode, and adjust the **Master Volume** as desired.


Copyright © 2009–2014, Texas Instruments Incorporated

#### 4.6.1.2 2.1 SE AD + BTL BD

1. Set up the hardware, and select the TAS5711 tab .
2. Select the Input MUX from GDE. In the properties window, select BD Mode
3. GDE: **Target > Connect**.
4. Finally, uncheck the **shutdown** box to bring the device out of Shutdown mode, and adjust the **Master Volume** as desired.

## 5 Advanced Audio Processing Features in TAS5711

TAS5711 Process Structure as shown in GDE:

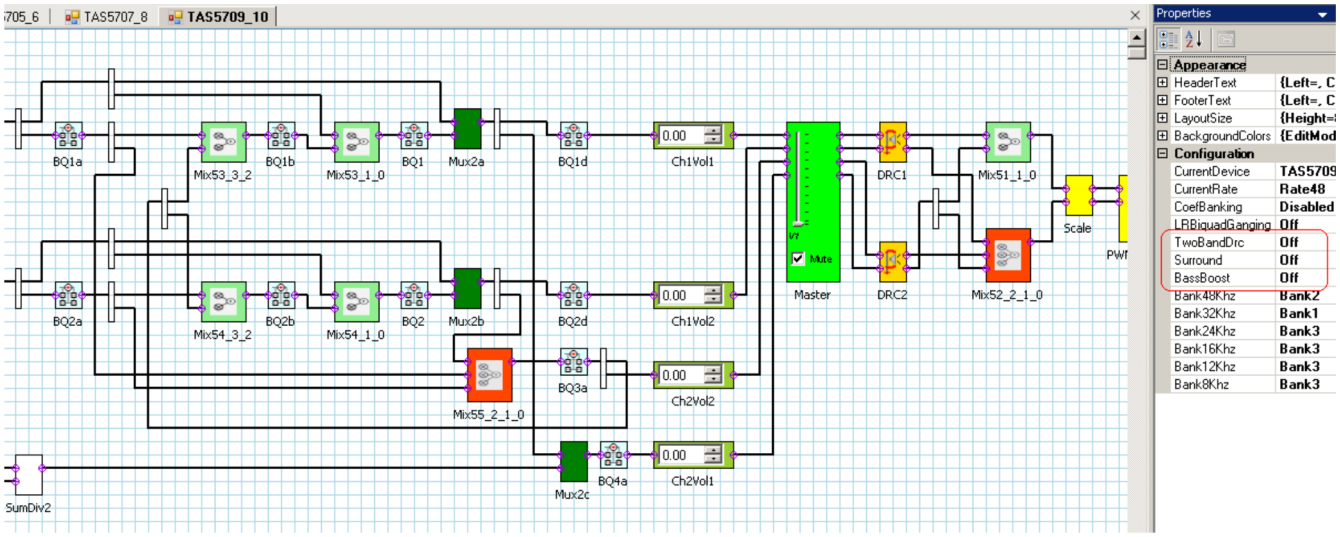


C001

1. **Surround (3D): ON/OFF**

   Turn it ON. Then L-R terms gets mixed with raw L and R after band-pass filtering. L-signal is RED, R-signal is BLUE and L-R-signal is BLACK.

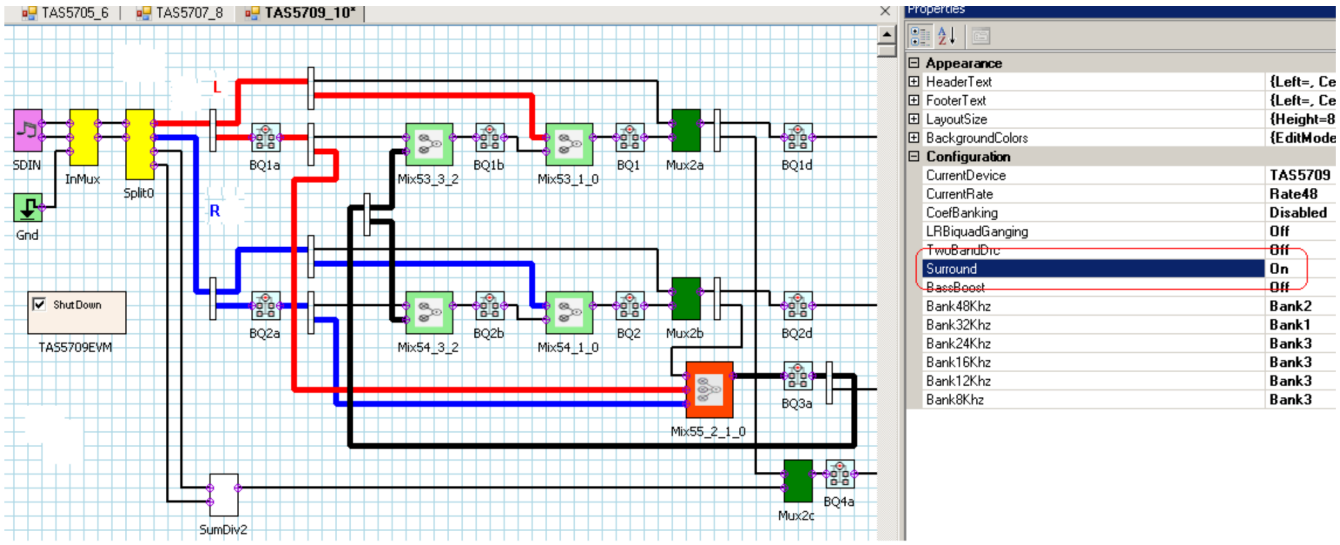


C002

Biquads and mixers can be adjusted to fine-tune 3D.


Copyright © 2009–2014, Texas Instruments Incorporated

# 6 Jumpers and Control Utilities on MC57xxPSIA board

## 6.1 RCA/OPTICAL Jumpers

Select the jumper to reflect the source whether it is RCA or OPTICAL.

## 6.2 Switches

Reset is an active-low function. Pressing the master reset switch (S2) resets the TAS5711 device; USB RESET (S1) resets the USB bus. Pressing PDNZ (S4) powers down the TAS5711, and pressing MUTE (S5) mutes (volume mute) the TAS5711.

## 6.3 LED Indicators

LED1 : USB Power connector installed at J1.

LED2 : 3.3V Power is valid.

LED3: RCA connection made

LED4: Optical connection made

LED5: SPDIF signal locked

LED6: FAULT. Ignore the FAULT LED until the FAULT pin is programmed to be an output via an I2C write to reg0X05.

LED7: PDN switch (S4) is depressed.

LED8: MUTE switch (S5) is depressed.

# 7 Board Layouts, Bill of Materials, and Schematic

## 7.1 TAS5711EVM Board Layouts

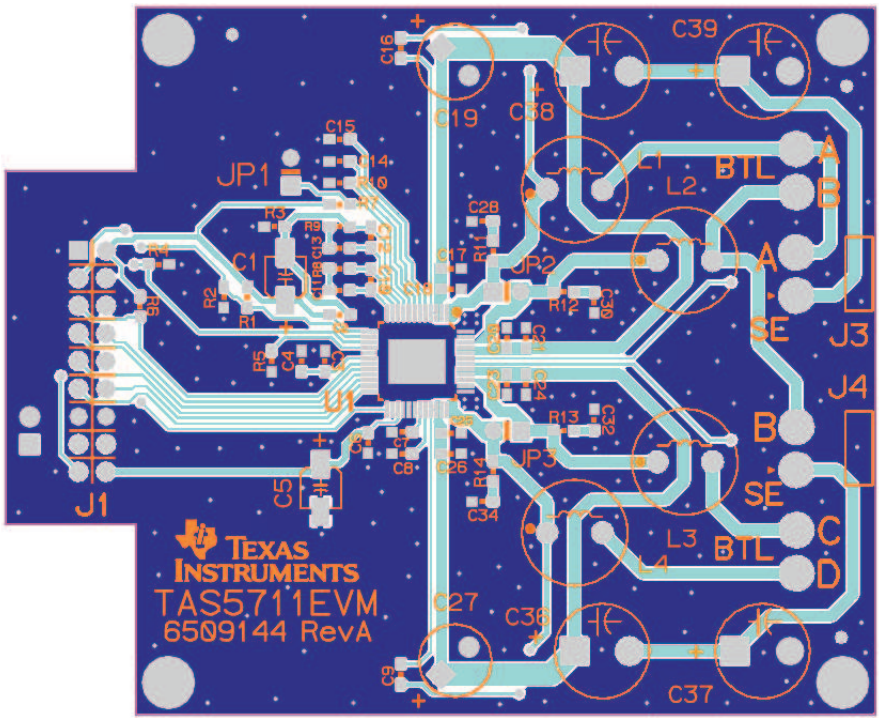


**Figure 16. TAS5711EVM Top Composite Assembly**



Copyright © 2009–2014, Texas Instruments Incorporated

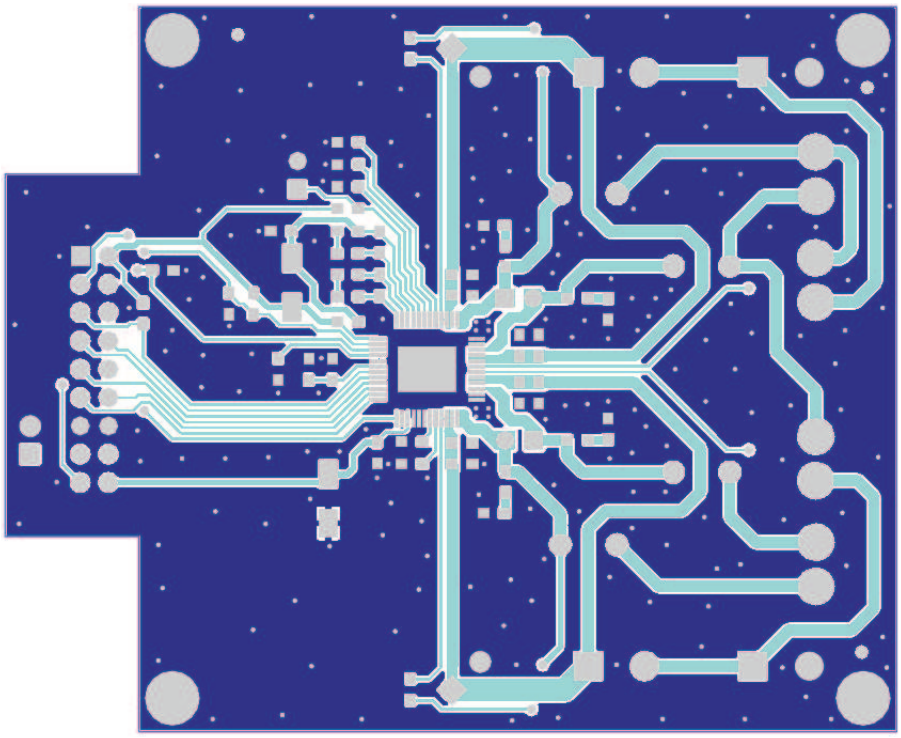

**Figure 17. TAS5711EVM Top Copper Assembly**

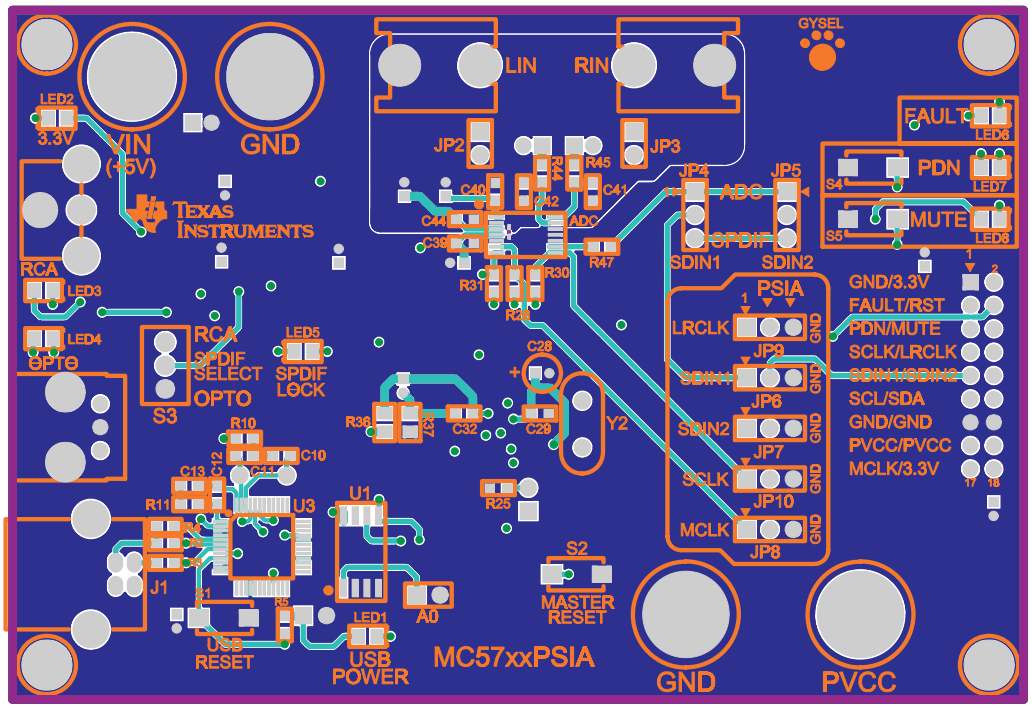


**Figure 18. MC57xxPSIA Top Assembly**


Copyright © 2009–2014, Texas Instruments Incorporated

## 7.2 Bill of Materials

### Table 2. Bill of Materials for TAS5711EVM

| MANU Part No. | QTY | REF DES | Vendor Part No. | Description | Vendor | MANU |
|---|---|---|---|---|---|---|
| **TI-SEMICONDUCTORS** | | | | | | |
| TAS5711PHP | 1 | U1 | TAS5711PHP | 15W DIGAMP WITH DAP HTQFP48-PHP ROHS | Texas Instruments | Texas Instruments |
| **CAPACITORS** | | | | | | |
| ECJ-1VC1H331J | 4 | C28,C30,C32,C34 | PCC331ACVCT | CAP SMD0603 CERM 330PFD 50V 5% COG ROHS | DIGI-KEY | PANASONIC |
| C1608C0G1H102J | 4 | C17,C20,C23,C25 | 445-1293-1 | CAP SMD0603 CERM 1000PFD 50V 5% COG ROHS | DIGI-KEY | TDK CORP. |
| GRM188R71H222KA01D | 1 | C14 | 490-1500-1 | CAP SMD0603 CERM 2200PFD 50V 10% X7R ROHS | DIGI-KEY | MURATA |
| ECJ-1VB1H472K | 2 | C10,C12 | PCC1780CT | CAP SMD0603 CERM 4700PFD 50V 10% X7R ROHS | DIGI-KEY | PANASONIC |
| ECJ-1VB1H333K | 4 | C9,C16,C22,C45 | PCC2284CT | CAP SMD0603 CERM 0.033UFD 50V 10% X7R ROHS | DIGI-KEY | PANASONIC |
| ECJ-1VB1E473K | 2 | C11,C13 | PCC1771CT | CAP SMD0603 CERM 0.047UFD 25V 10% X7R ROHS | DIGI-KEY | PANASONIC |
| ECJ-1VB1C104K | 4 | C2,C4,C6,C7 | PCC1762CT | CAP SMD0603 CERM 0.1UFD 16V 10% X7R ROHS | DIGI-KEY | PANASONIC |
| ECJ-1VB1H104K | 4 | C18,C21,C24,C26 | PCC2398CT | CAP SMD0603 CERM 0.1UFD 50V 10% X7R ROHS | DIGI-KEY | PANASONIC |
| C1206C684K5RACTU | 4 | C29, C31, C33, C35 | 399-3500-1 | CAP SMD1206 CERM 0.68UFD 50V 10% X7R ROHS | DIGI-KEY | KEMET |
| TMK107BJ105KA | 2 | C8,C15 | 587-1248-1 | CAP SMD0603 CERM 1.0UFD 25V 10% X5R ROHS | DIGI-KEY | TAIYO YUDEN |
| C1608X5R0J475M | 1 | C3 | 445-1417-1 | CAP SMD603 CERM 4.7UFD 6.3V 20% X5R ROHS | DIGI-KEY | TDK |
| EEE1CA100SR | 2 | C1,C5 | PCE3878CT | CAP SMD ELECT 10ufd 16V 20% VS-B ROHS | DIGI-KEY | PANASONIC |
| ECA-1VM101 | 1 | C44 | P5165 | CAP ALUM ELEC M RADIAL 100UFD 35V 20% ROHS | DIGI-KEY | PANASONIC |
| ECA-1VM221BJ | 2 | C19,C27 | P10419TB | CAP ALUM ELEC M RADIAL 220UFD 35V 20% ROHS | DIGI-KEY | PANASONIC |
| EEU-FC1H221S | 4 | C36, C37, C38, C39 | P10326 | CAP THU ELE FC 220ufd 50V 20% ROHS | DIGI-KEY | PANASONIC |
| **RESISTORS** | | | | | | |
| ERJ-3GEY0R00V | 1 | R3 | P0.0GCT | RESISTOR SMD0603 0.0 OHM 5% 1/10W ROHS | DIGI-KEY | PANASONIC |
| ERJ-3GEYJ180V | 4 | R11,R12,R13,R14 | P18GCT | RESISTOR SMD0603 18 OHMS 5% 1/10W ROHS | DIGI-KEY | PANASONIC |
| ERJ-3GEYJ471V | 2 | R8,R9 | P470GCT | RESISTOR SMD0603 470 OHMS 5% 1/10W ROHS | DIGI-KEY | PANASONIC |
| ERJ-3EKF1002V | 7 | R4, R6, R7, R15, R16, R17, R18 | P10.0KHCT | RESISTOR SMD0603 10.0K 1% THICK FILM 1/10W ROHS | DIGI-KEY | PANASONIC |
| RC0603FR-0718K2L | 1 | R5 | 311-18.2KHRCT | RESISTOR SMD0603 THICK FILM 18.2K 1% 1/10W ROHS | DIGI-KEY | YAGEO |
| CRCW060322K1FKEA | 1 | R10 | 541-22.1KHCT | RESISTOR SMD0603 22.1K OHMS 1% 1/10W ROHS | DIGI-KEY | VISHAY |
| ERJ-3GEYJ104V | 1 | R2 | P100KGCT | RESISTOR SMD0603 100K OHM 5% THICK FILM 1/10W ROHS | DIGI-KEY | PANASONIC |
| **INDUCTORS** | | | | | | |
| A7503AY-220M | 4 | L1–L4 | A7503AY-220M | INDUCTOR, SERIES 11RHBP/A7503AY, 22UH/2.3A ROHS | Toko | Toko |
| **HEADERS, JACKS AND TERMINAL BLOCKS** | | | | | | |
| PBC02SAAN | 3 | JP1,JP2,JP3 | S1011E-02 | HEADER THRU MALE 2 PIN 100LS GOLD ROHS | DIGI-KEY | SULLINS |
| PBC09DAAN | 1 | J1 | S2011E-09 | HEADER THRU MALE 2X9 100LS GOLD ROHS | DIGI-KEY | SULLINS |
| B2PS-VH(LF)(SN) | 1 | J2, J3, J4, J5 | 455-1648 | JACK JST-VH RA 2-PIN 3.96mmLS ROHS | DIGI-KEY | JST |
| **SHUNTS** | | | | | | |
| SPC02SYAN | 3 | JP1, JP2, JP3 | S9001 | SHUNT, BLACK AU FLASH 0.100LS | DIGI-KEY | SULLINS |
| **STANDOFFS AND HARDWARE** | | | | | | |
| 2027 | 4 | NA | 2027K | STANDOFF ,4-40 0.5IN 3/16IN DIA ALUM RND F-F | DIGI-KEY | KEYSTONE ELECTRONICS |
| PMS 440 0025 PH | 4 | NA | H342 | 4-40 SCREW, STEEL 0.250 IN | DIGI-KEY | BUILDING FASTENERS |
| Component Count: | 62 | | | | | |
| **COMPONENTS NOT ASSEMBLED** | | | | | | |
| **R1** | | | | | | |


Copyright © 2009–2014, Texas Instruments Incorporated

### 7.3 Schematic

The schematic for TAS5711EVM appears on the following page.

## Revision History

| Changes from Original (January 2009) to A Revision | Page |
|---|---|
| • Changed Changed TAS5707EVM3 to TAS5707EVM throughout the document | 1 |
| • Changed Software Quick-Start Guide Step 5 From: "Jumper JP1 must be left open.." To: "Jumper JP1 must be left IN..." | 10 |

NOTE: Page numbers for previous revisions may differ from page numbers in the current version.


Copyright © 2009–2014, Texas Instruments Incorporated

# TAS5711PHP EVALUATION BOARD

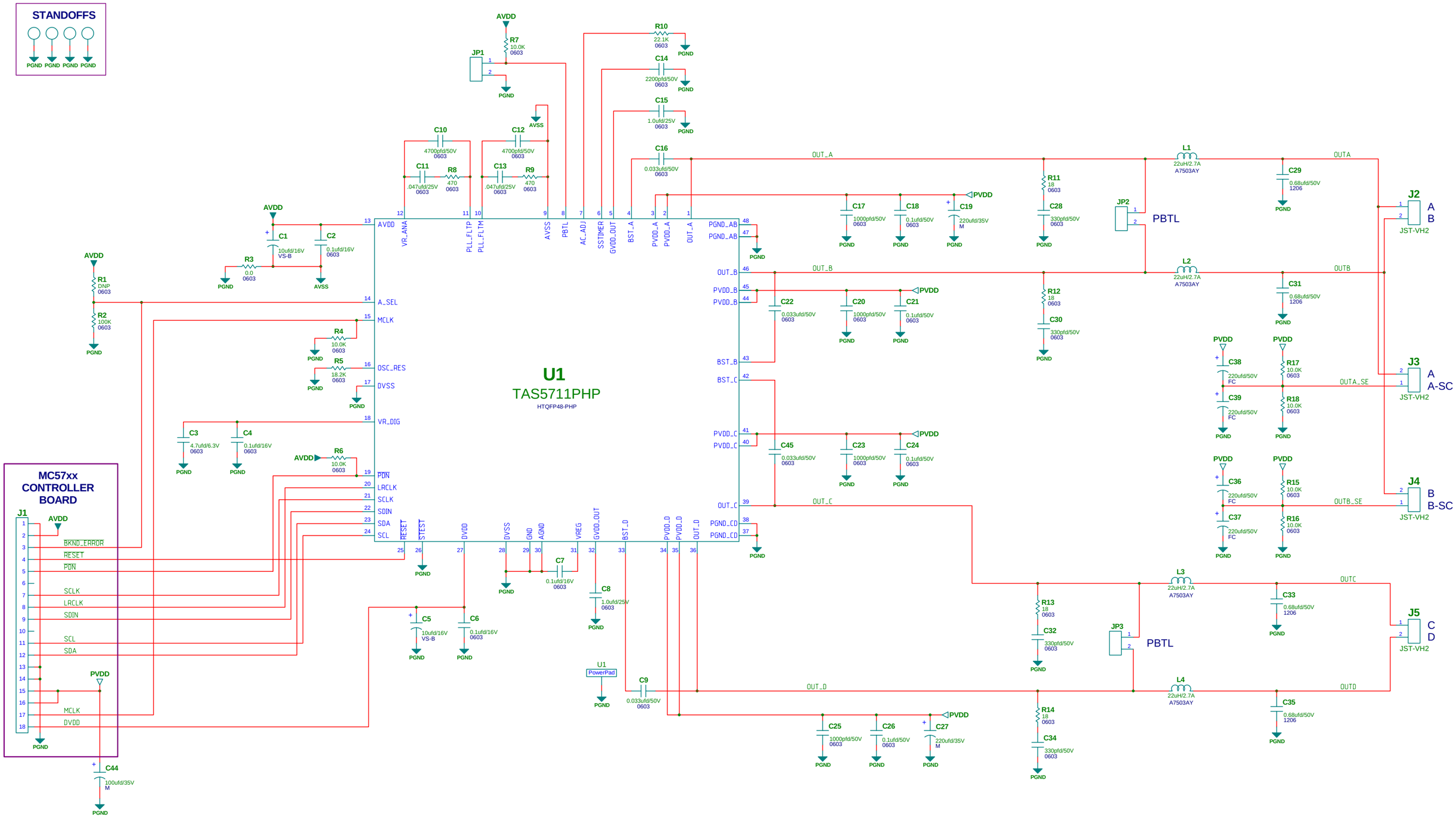


| | | | |
|---|---|---|---|
| TEXAS INSTRUMENTS | | | SCH REV A |
| | | | PCB REV A |
| PAGE INFO: TAS5711 EVALUATION BOARD | | DATE JUNE 24, 2009 | SHEET 1 OF 3 |
| DESIGN LEAD AMBREESH TRIPATHI | EDGE # 6509144 | FILENAME TAS5711EVM.SBK | DRAWN BY LDN |

## IMPORTANT NOTICE

Texas Instruments Incorporated and its subsidiaries (TI) reserve the right to make corrections, enhancements, improvements and other changes to its semiconductor products and services per JESD46, latest issue, and to discontinue any product or service per JESD48, latest issue. Buyers should obtain the latest relevant information before placing orders and should verify that such information is current and complete. All semiconductor products (also referred to herein as “components”) are sold subject to TI’s terms and conditions of sale supplied at the time of order acknowledgment.

TI warrants performance of its components to the specifications applicable at the time of sale, in accordance with the warranty in TI’s terms and conditions of sale of semiconductor products. Testing and other quality control techniques are used to the extent TI deems necessary to support this warranty. Except where mandated by applicable law, testing of all parameters of each component is not necessarily performed.

TI assumes no liability for applications assistance or the design of Buyers’ products. Buyers are responsible for their products and applications using TI components. To minimize the risks associated with Buyers’ products and applications, Buyers should provide adequate design and operating safeguards.

TI does not warrant or represent that any license, either express or implied, is granted under any patent right, copyright, mask work right, or other intellectual property right relating to any combination, machine, or process in which TI components or services are used. Information published by TI regarding third-party products or services does not constitute a license to use such products or services or a warranty or endorsement thereof. Use of such information may require a license from a third party under the patents or other intellectual property of the third party, or a license from TI under the patents or other intellectual property of TI.

Reproduction of significant portions of TI information in TI data books or data sheets is permissible only if reproduction is without alteration and is accompanied by all associated warranties, conditions, limitations, and notices. TI is not responsible or liable for such altered documentation. Information of third parties may be subject to additional restrictions.

Resale of TI components or services with statements different from or beyond the parameters stated by TI for that component or service voids all express and any implied warranties for the associated TI component or service and is an unfair and deceptive business practice. TI is not responsible or liable for any such statements.

Buyer acknowledges and agrees that it is solely responsible for compliance with all legal, regulatory and safety-related requirements concerning its products, and any use of TI components in its applications, notwithstanding any applications-related information or support that may be provided by TI. Buyer represents and agrees that it has all the necessary expertise to create and implement safeguards which anticipate dangerous consequences of failures, monitor failures and their consequences, lessen the likelihood of failures that might cause harm and take appropriate remedial actions. Buyer will fully indemnify TI and its representatives against any damages arising out of the use of any TI components in safety-critical applications.

In some cases, TI components may be promoted specifically to facilitate safety-related applications. With such components, TI’s goal is to help enable customers to design and create their own end-product solutions that meet applicable functional safety standards and requirements. Nonetheless, such components are subject to these terms.

No TI components are authorized for use in FDA Class III (or similar life-critical medical equipment) unless authorized officers of the parties have executed a special agreement specifically governing such use.

Only those TI components which TI has specifically designated as military grade or “enhanced plastic” are designed and intended for use in military/aerospace applications or environments. Buyer acknowledges and agrees that any military or aerospace use of TI components which have ***not*** been so designated is solely at the Buyer's risk, and that Buyer is solely responsible for compliance with all legal and regulatory requirements in connection with such use.

TI has specifically designated certain components as meeting ISO/TS16949 requirements, mainly for automotive use. In any case of use of non-designated products, TI will not be responsible for any failure to meet ISO/TS16949.

| **Products** | | **Applications** | |
|---|---|---|---|
| Audio | www.ti.com/audio | Automotive and Transportation | www.ti.com/automotive |
| Amplifiers | amplifier.ti.com | Communications and Telecom | www.ti.com/communications |
| Data Converters | dataconverter.ti.com | Computers and Peripherals | www.ti.com/computers |
| DLP® Products | www.dlp.com | Consumer Electronics | www.ti.com/consumer-apps |
| DSP | dsp.ti.com | Energy and Lighting | www.ti.com/energy |
| Clocks and Timers | www.ti.com/clocks | Industrial | www.ti.com/industrial |
| Interface | interface.ti.com | Medical | www.ti.com/medical |
| Logic | logic.ti.com | Security | www.ti.com/security |
| Power Mgmt | power.ti.com | Space, Avionics and Defense | www.ti.com/space-avionics-defense |
| Microcontrollers | microcontroller.ti.com | Video and Imaging | www.ti.com/video |
| RFID | www.ti-rfid.com | | |
| OMAP Applications Processors | www.ti.com/omap | **TI E2E Community** | e2e.ti.com |
| Wireless Connectivity | www.ti.com/wirelessconnectivity | | |

Mailing Address: Texas Instruments, Post Office Box 655303, Dallas, Texas 75265
Copyright © 2014, Texas Instruments Incorporated